Linear Actuators

A linear actuator is a versatile device that can be thought of as an electrical pneumatic or hydraulic cylinder. These actuators are at their best in intermittent applications such as windows, gates and doors, office automation, home care, traffic facilities, automatic throttles and low duty automation project.

Linear actuators are user friendly, competitively priced and easy to install with a simple 2-wire system. Feedback options allow for more complex control systems or use of control and keypads allow for plug and play installation. Manufacturing is to ISO9000 and many types are CE rated.

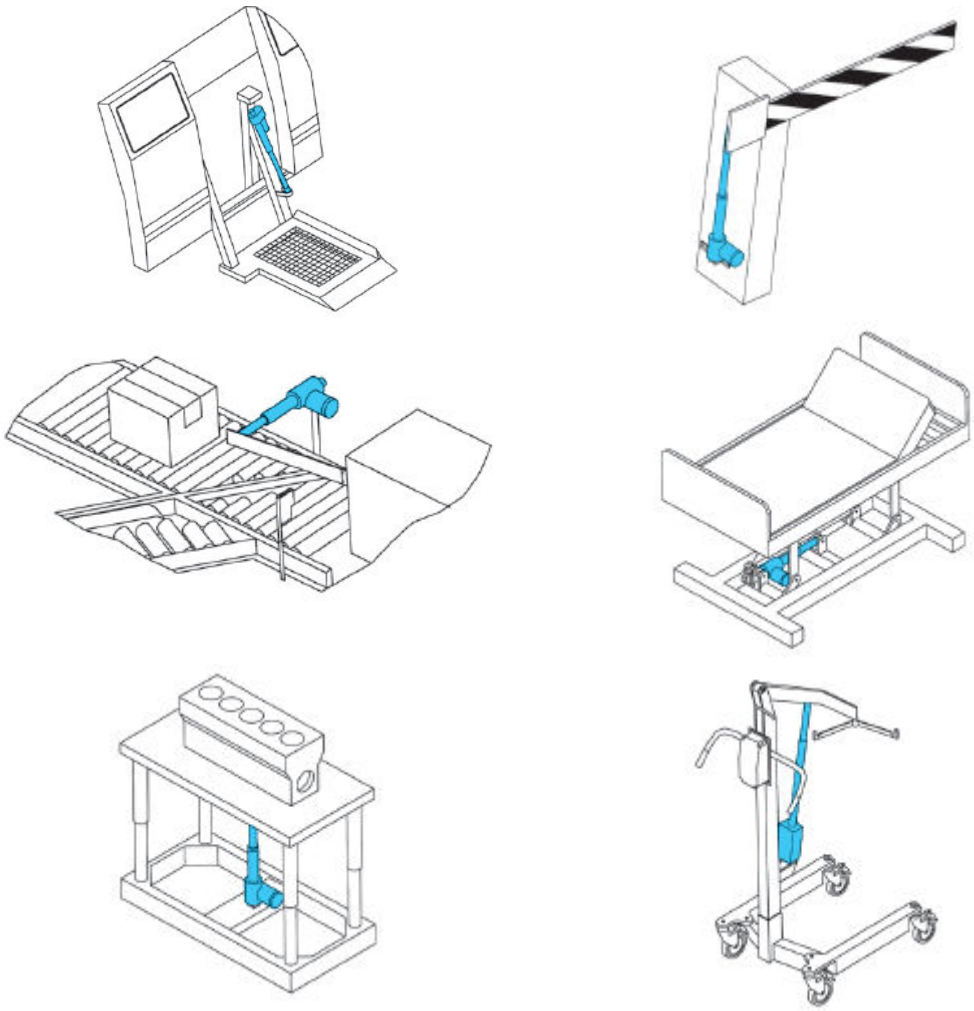

Installations must not place torsion, bending or impact on the actuator. As the actuators use sealed DC motors and plain screw shafts care must be taken to observe the duty cycle or life of the actuator will be compromised.

HIWIN®
Linear Motion Products & Technology

MOTECK ELECTRIC CORP

LAM3 industrial actuator

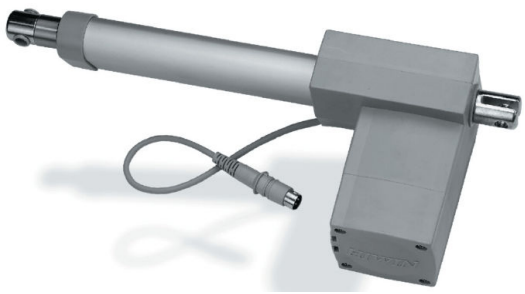

High load 24V and 12V actuator for heavy-duty applications.

Easy two wire input cable, Duty cycle based on full load. Actuator comes complete with internal limit switches.

240V LAK2D controller mounts directly to the actuator available from stock.

LAM3-1 types stocked in NZ in IP65, other types available on indent.

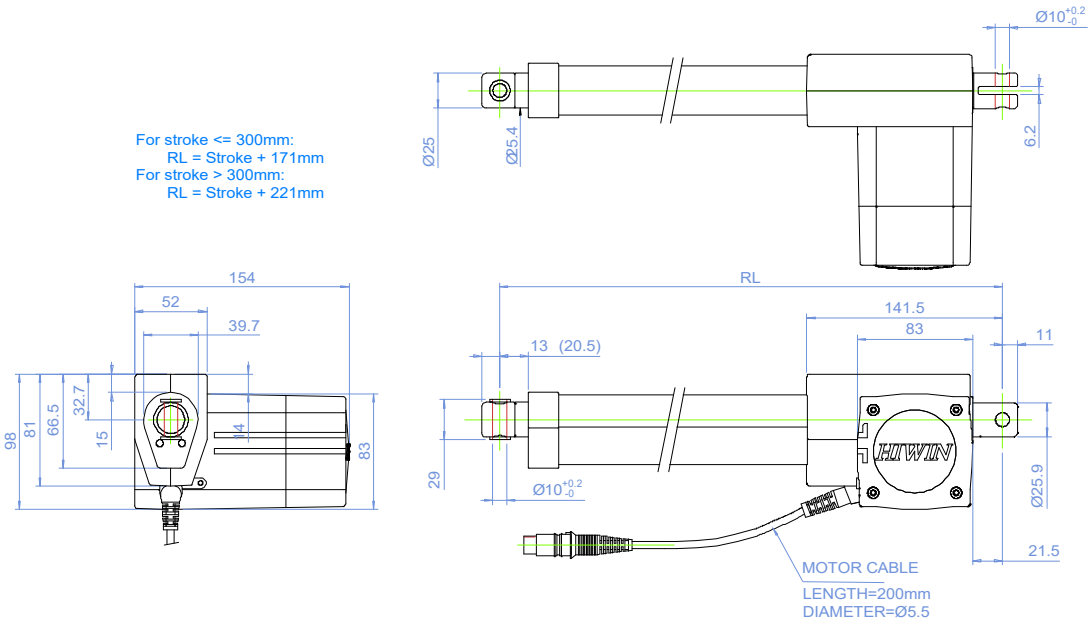

Model	Thrust (N)	Pulling (N)	Holding Force (N)	Speed (mm/s)	Standard Stroke (mm)								Duty Cycle %	Max Current (A)
				Load/no load										24VDC
LAM3-1	**6000**	**5000**	**5000**	**4/5.5**	**50**	**100**	**150**	**200**	**250**	**300**	**350**	**400**	**10**	**6**
LAM3-2	4000	4000	4000	5.5/7.5	50	100	150	200	250	300	350	400	10	5
LAM3-3	3000	3000	3000	7/9	50	100	150	200	250	300	350	400	10	4
LAM3-4	2000	2000	1500	11.5/14.5	50	100	150	200	250	300	350	400	10	4

Regular stock items in bold type

LAN1 actuator

High load 12V actuator for heavy-duty applications.

Easy two wire input cable, Duty cycle based on full load. Actuator comes complete with internal limit switches.

LAK4 controller can be mounted directly to the actuator.
Model is being phased out.

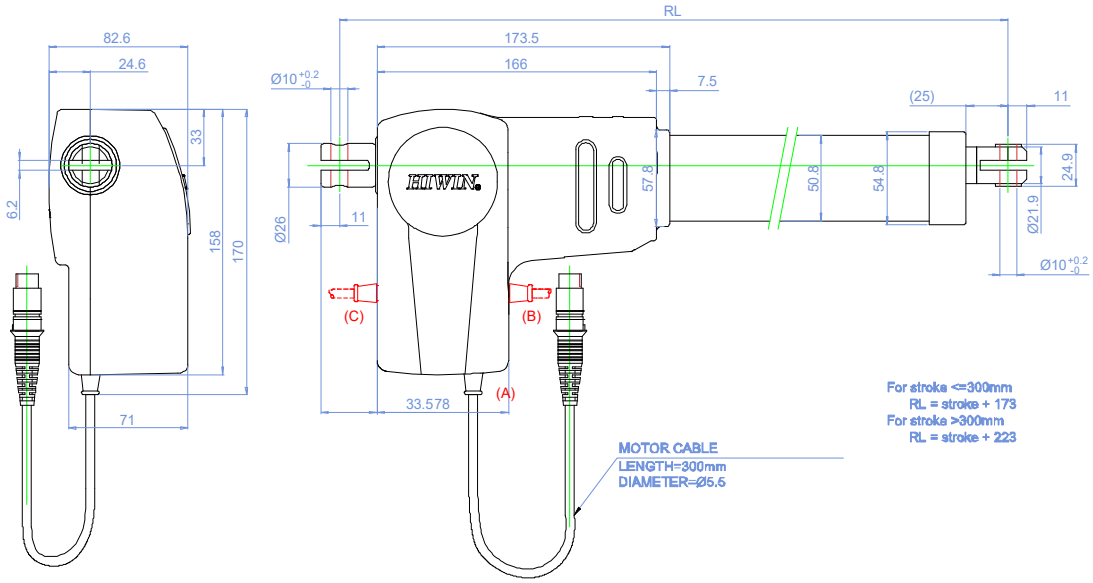

Model	Thrust (N)	Pulling (N)	Holding Force (N)	Speed (mm/s)	Standard stroke (mm)							Duty Cycle %	Max Current (A)
				Load/no load									12VDC
LAN1-1	**5000**	**5000**	**5000**	**3/6**	**100**	**150**	**200**	**250**	**300**	**350**	**400**	**10**	**11**
LAN1-2	4000	4000	4000	4/8	100	150	200	250	300	350	400	10	11
LAN1-3	3000	3000	3000	5/10	100	150	200	250	300	350	400	10	10

Regular stock items in bold type

Can be supplied as 24V with a wide variety of options including;

- Position feedback
- Safety nuts
- Mechanical spline
- Quick release

HIWIN®
Linear Motion Products & Technology

MOTECK ELECTRIC CORP

LAS1/2 compact actuator

Great actuator for a wide variety of applications including shutters, doors, remote controls, hatches, home automation and windows.

12V or 24V with 2 wire connection. Duty cycle based on full load. Actuator comes complete with internal limit switches.

LAS-1 and LAS-2 stock in NZ. Not suitable for direct exposure to sun and rain.

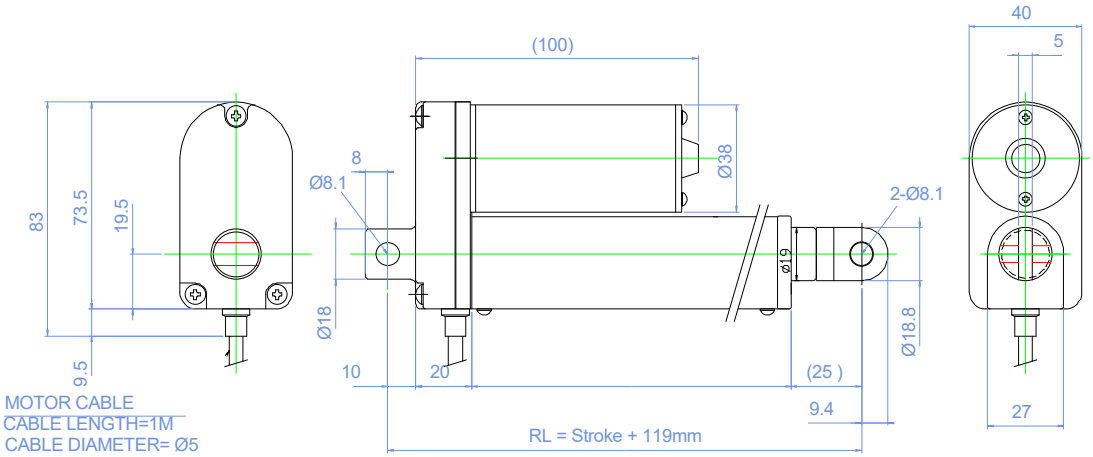

Model	Thrust (N)	Pulling (N)	Holding Force (N)	Speed (mm/s) load/No load	Standard Stroke (mm)						Duty Cycle %	Max Current (A)	
												12V DC	24V DC
LAS-1	**1200**	**1200**	**800**	**8/12**	**25**	**50**	**100**	**150**	**200**	**250**	**10**	**6**	**2.5**
LAS-2	**600**	**600**	**300**	**16/25**	**25**	**50**	**100**	**150**	**200**	**250**	**10**	**6**	**3**

Regular stock items in bold type

Also available is the similar LAS3 type with potentiometer or optical (pulse) feedback.

LAS4 compact actuator

Elegant design ideal for architectural and exposed applications.

12V or 24V with 2 wire connection. Duty cycle based on full load. Actuator comes complete with internal limit switch.

Not suitable for direct exposure to sun and rain.

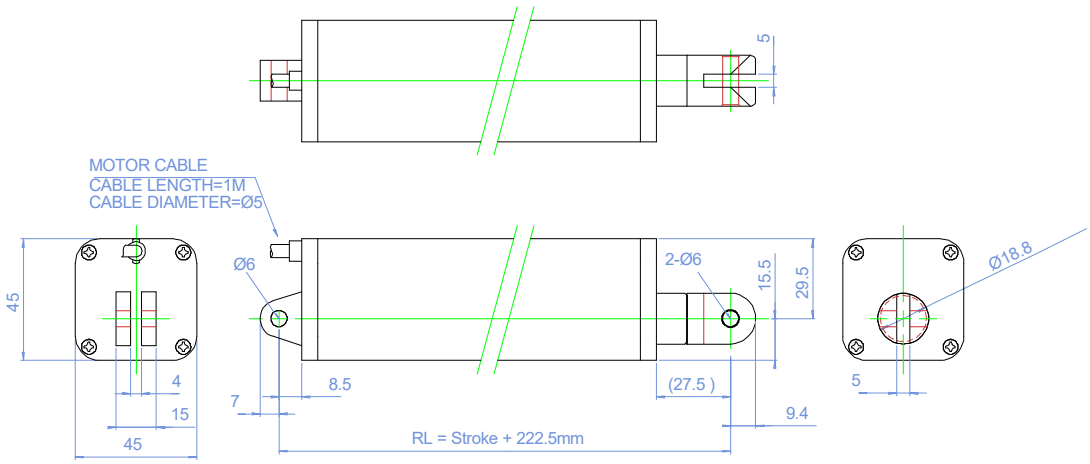

Model	Thrust (N)	Pulling (N)	Holding Force (N)	Speed (mm/s)	Standard Stroke (mm)					Duty Cycle %	Max Current (A)	
				load/No load							12VDC	24VDC
LAS4-1	**800**	**800**	**600**	**10/15**	**100**	**150**	**200**	**250**	**300**	**10**	**5**	**1.8**
LAS4-2	300	300	200	30/46	100	150	200	250	300	10	6	3.6

Regular stock items in bold type

CI72 controller

Highly capable controller with synchronise function and or overload protection.

- Control 12 or 24V actuators up to 25Amp
- Simple DIP switch setup
- Adjustable 10 step 2-25A current protection
- Single of dual actuator control
- Servo control option – analogue position
- Adjustable soft start
- Synchronous move with POT or hall actuators
- Din rail mount

HIWIN®
Linear Motion Products & Technology

MOTECK ELECTRIC CORP

N

ID10 Ball screw industrial actuator

Heavy industrial actuator with built in clutch, higher duty cycle. High load ball screw model.

12V or 24V with 2 wire connection. Duty cycle based on full load. Limit switch model can be adjusted.

Standard **Potentiometer/Limit switches**

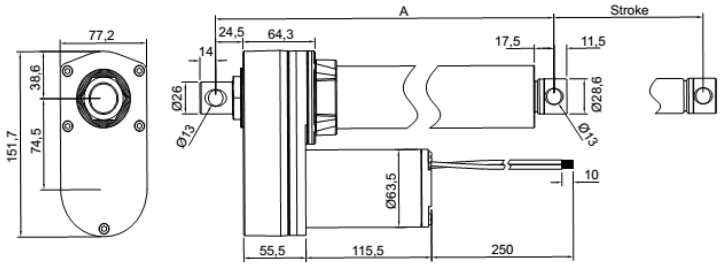

Standard model

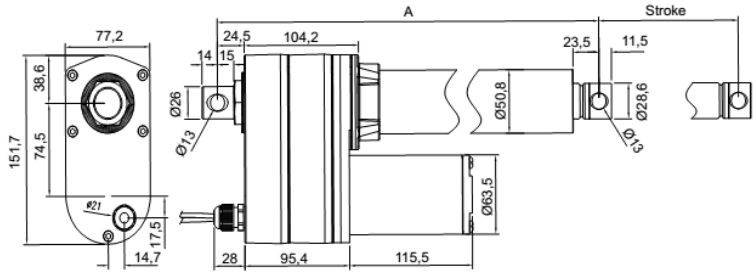

With Limit switches and or POT

Ratio	Thrust (N)	Pulling (N)	Static Load (N)	Speed (mm/s) Load/no load	Standard stroke (mm)							Duty Cycle %	Max Current (A)	
													24VDC	12VDC
5:1	2500	2500	13600	47/67	102	153	203	254	305	457	610	25	14	28
10:1	3500	3500	13600	26/33	102	153	203	254	305	457	610	25	9	18
20:1	4500	4500	13600	14/17	102	153	203	254	305	457	610	25	7	15
30:1	6000	6000	13600	10/11	102	153	203	254	305	457	610	25	7	15
40:1	**7000**	**7000**	**13600**	**7/8**	**102**	**153**	**203**	**254**	**305**	**457**	**610**	**25**	**6**	**12**
		Retracted Length			302	353	404	455	506	735	888			
		POT/LT retracted length			**399**	**450**	**501**	**552**	**680**	**832**	**985**			

Stocked items in bold – *40:1 ratio with limits and POT*

Model coding

ID10 - **24 -** **20 -** **B -** **153 -** **LT.POT.MD...**

Voltage
12-12V DC
24-24V DC

Gear Ratio
5-5:1
10-10:1
20-20:1
30-30:1
40-40:1

A: Acme
B: Ball Screw

Stroke (mm)
102
153
203
254
305
457
610

LT: Limit switch
POT: Potentiometer
MD: Manual Drive
IP65

Other types and options

High load LAN3 – 1000N thrust with feedback, spline and safety nut options.

Foot switches and overload protection boxes

Key pads from 1 to 5 axis and foot switch option

Controllers for 1 to 6 axes. Plug and play functionality, battery operated, synchronised and simultaneous movements possible.

Heavy industrial AC actuators with high duty cycle, loads and wide speed range.

Screw jacks in ACME or ball screw, travelling nut or travelling screw layouts